Merkel Combination Seal NIPSL 320

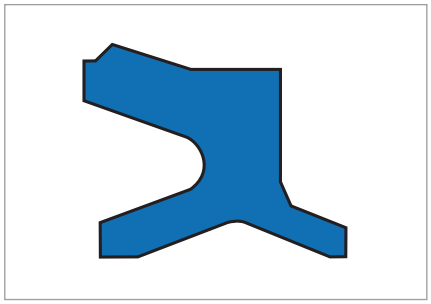

Fig. 1 Merkel Combination Seal NIPSL 320

Product description

Combination wiper seal without metal reinforcement with special pneumatic sealing edge.

Product advantages

- Combination seal with minimal space requirements, which seals inwards and wipes outwards
- The special pneumatic sealing edge gives very good tightness with low friction and maintains an effective lubricating film.
- Material with high wear resistance.

Application

Small cylinders, compact cylinders.

Material

Material	Code	Hardness
High performance polyurethane	94 AU 925	94 Shore A

Operating conditions

Medium	Prepared, dried and de-oiled compressed air (after greasing for fitting)
Operating pressure p	≤1,2 MPa (12 bar)
Temperature T	−30 °C ... +90 °C
Running speed v	≤1 m/s

Design notes

Surfaces

Surface roughness	R_{max}	R_p/R_z
Rod	≤4 µm	–
	tp (25% R_{max}) = 50 ... 75%	
Groove base	≤10 µm	<0,5

→ Technical Manual.

Fitting & installation

Careful fitting is a prerequisite for the correct function of the seal. → Technical Manual.
The Merkel Combination Seal NIPSL 320 for small cylinders and compact cylinders can be snapped by hand into the housing grooves provided, with the piston rod removed.

© Freudenberg Simrit GmbH & Co. KG | Seals for Fluid Power Catalog 2007

Article list

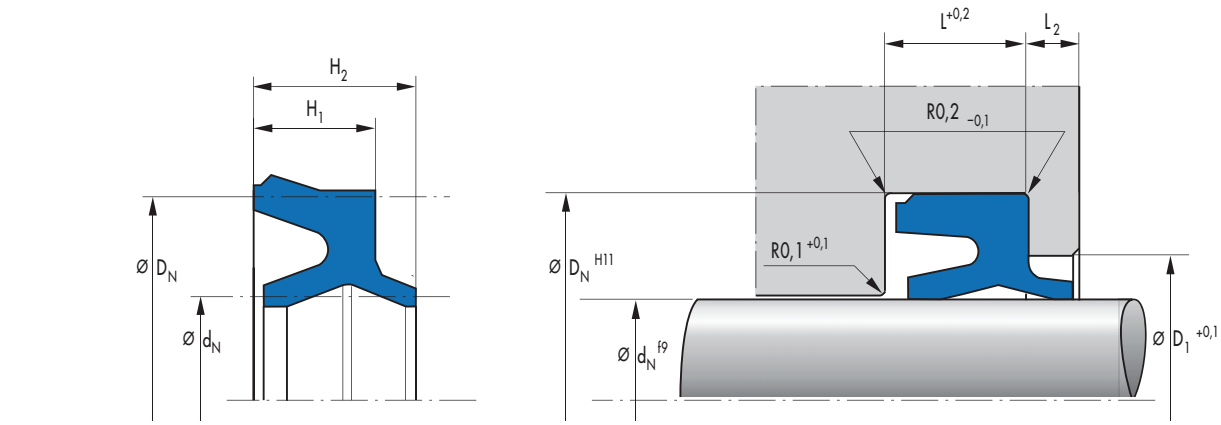

d_N	D_N	H_1	H_2	D_1	L	L_2	Material	Article No.	
10	16	3,6	4,8	12,5	4	1,5	94 AU 925	433063	●
12	18	3,6	4,8	14,5	4	1,5	94 AU 925	433064	●
16	22	3,6	4,8	18,5	4	1,5	94 AU 925	433065	●
20	26	3,6	4,8	22,5	4	1,5	94 AU 925	433068	●
25	31	3,6	4,8	27,5	4	1,5	94 AU 925	468023	●
32	40	4,5	5,8	35	5	1,5	94 AU 925	467972	●

● Available from stock ○ On request: Tool is available, delivery at short notice