# Sealing Cover GA, GSA

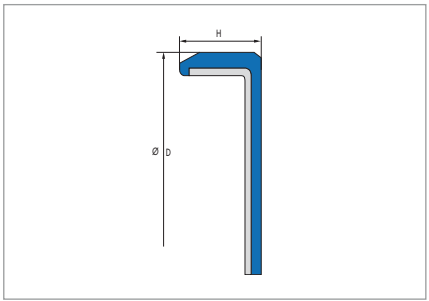


Fig. 1 Sealing Cover GA

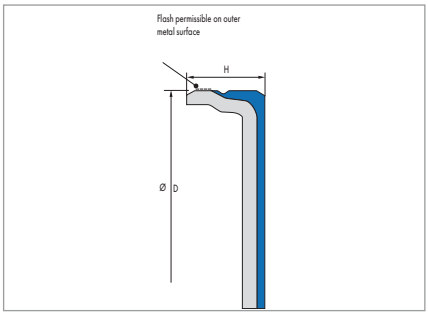


Fig. 2 Sealing Cover GSA

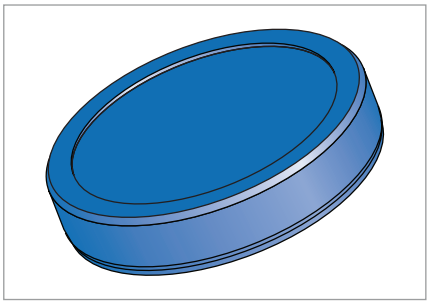

Fig. 3 Sealing Cover GA – Top view

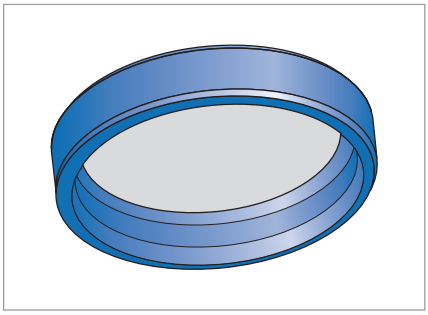

Fig. 4 Sealing Cover GA – Bottom view

## Product description

- GA (normal design, rubber outside): sealing cover with vulcanised metal inserts made of sheet steel
- GSA (special design, rubber/steel outside): sealing cover with vulcanised metal inserts made of sheet steel with metal seat (H8).

## Product advantages

- Secure sealing to the housing bore, even with increased roughness of the bore, higher thermal expansion and split housings
- Very stable construction
- Can be painted
- Variety of standard versions.

## Material

Sealing cover for the static sealing of boreholes in housings with press fitting e.g. shaft pass through walls in gearbox housings.

## Material

Acrylonitrile-butadiene rubber

| | |
|---|---|
| **Designation** | 75 NBR 99004 |
| **Colour** | Black |
| **Hardness** | approx. 75 Shore A |
| **Metal insert** | unalloyed steel DIN EN 10139 (DIN 1624) |

Sealing covers made of other materials and in other dimensions available on enquiry.

## Operating conditions

| | |
|---|---|
| **Media** | All common mineral oils |
| **Temperature** | –40 ... +100 °C |

## Fitting & installation

Design of locating bore

| | |
|---|---|
| **Tolerance** | ISO H8 |
| **Roughness type GA** | $R_{max}$ <= 25 µmr<br>$R_a$ = 1,6 ... 6,3 µmr<br>$R_z$ = 10 ... 25 µm |
| **Roughness type GSA** | $R_{max}$ <= 16 µm<br>$R_a$ = 0,8 ... 3,2 µm<br>$R_z$ = 6,3 ... 16 µm |

## Article list

| D | H | Material | Type | Article No. | |
|---|---|---|---|---|---|
| 19 | 7 | 75 NBR M99004 | GA | 506544 | ● |
| 22 | 4 | 75 NBR M99004 | GA | 456944 | ● |
| 22 | 5 | 75 NBR M99004 | GSA | 506567 | ● |
| 22 | 8 | 75 NBR M99004 | GA | 426125 | ○ |
| 24 | 7 | 75 NBR M99004 | GA | 421453 | ○ |
| 28 | 4 | 75 NBR M99004 | GA | 506547 | ● |
| 28 | 7 | 75 NBR M99004 | GA | 506548 | ○ |
| 28 | 7 | 75 NBR M99004 | GSA | 506568 | ● |
| 30 | 5 | 75 NBR M99004 | GA | 506549 | ● |
| 30 | 8 | 75 NBR M99004 | GSA | 506685 | ● |
| 32 | 7 | 75 NBR M99004 | GA | 506550 | ● |
| 35 | 7 | 75 NBR M99004 | GA | 450889 | ● |
| 35 | 8 | 75 NBR M99004 | GSA | 506569 | ● |
| 37 | 5 | 75 NBR M99004 | GA | 506551 | ● |
| 37 | 7 | 75 NBR M99004 | GSA | 506570 | ● |
| 40 | 7 | 75 NBR M99004 | GA | 452807 | ● |
| 42 | 7 | 75 NBR M99004 | GSA | 506572 | ● |
| 42 | 9,5 | 75 NBR M99004 | GSA | 506686 | ● |
| 45 | 7 | 75 NBR M99004 | GA | 506552 | ● |
| 47 | 7 | 75 NBR M99004 | GA | 506554 | ● |
| 47 | 7 | 75 NBR M99004 | GSA | 506573 | ● |
| 47 | 10 | 75 NBR M99004 | GSA | 506687 | ● |
| 52 | 7 | 75 NBR M99004 | GA | 414626 | ● |
| 52 | 7 | 75 NBR M99004 | GSA | 506574 | ● |
| 52 | 10 | 75 NBR M99004 | GSA | 506575 | ● |
| 55 | 10 | 75 NBR M99004 | GA | 450892 | ○ |
| 55 | 10 | 75 NBR M99004 | GSA | 503418 | ● |
| 62 | 7 | 75 NBR M99004 | GA | 506556 | ● |
| 62 | 8 | 75 NBR M99004 | GSA | 440418 | ● |
| 62 | 10 | 75 NBR M99004 | GA | 506558 | ○ |
| 72 | 9 | 75 NBR M99004 | GSA | 506576 | ● |
| 72 | 10 | 75 NBR M99004 | GA | 506559 | ● |
| 80 | 10 | 75 NBR M99004 | GA | 506561 | ● |
| 80 | 12 | 75 NBR M99004 | GSA | 506577 | ● |
| 85 | 10 | 75 NBR M99004 | GA | 506562 | ● |
| 90 | 10 | 75 NBR M99004 | GA | 506563 | ● |
| 90 | 12 | 75 NBR M99004 | GSA | 506578 | ● |
| 100 | 10 | 75 NBR M99004 | GA | 506564 | ● |
| 100 | 12 | 75 NBR M99004 | GSA | 506579 | ● |

● Available from stock ○ On request: Tool is available, delivery at short notice


© Freudenberg Simrit GmbH & Co. KG | Simmerrings and Rotary Seals Catalog 2007