Simmerring Cassette Seal Type 3

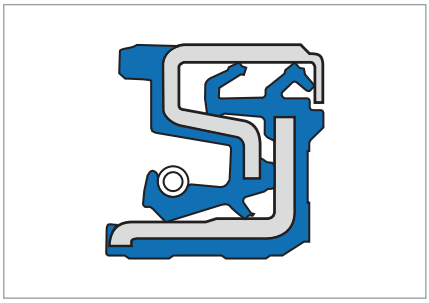

Fig.1 Simmerring Cassette Seal Type 3

Product description

- Design: special types, on enquiry
- Outer casing: elastomer/sheet metal
- Spring-loaded sealing lip
- Additional dust lips
- High resistance to dirt ingress
- Robust solution.

Product advantages

- Lengthening of maintenance interval for individual units
- Shaft must not be hardened or ground
- Old solution can usually be replaced by Simmerring Cassette Seal without change to housing
- The shaft must not be machined on maintenance or seal replacement.

Application

These examples of use provide general information on the primary applications for Simmerring Cassette Seals and their performance in relation to dirt from the outside. Simmerring Cassette Seals (types 1, 2 or 3) must be selected taking into account the application conditions (shaft speed, oil temperature, etc.). Further information on enquiry.

- Agricultural machinery
  - Tractors/hub
  - Tractors/propeller shafts*
  - Harrows
  - Motorised cultivators
  - Tillers
  - Fertiliser spreading machinery
- Construction machinery (road rollers, excavators, fork-lift trucks, mixers)
  - Axles: hubs
  - Axles: propeller shafts*.

* With axial shaft movement, special design necessary.

Material

Acrylonitrile-butadiene rubber

Code	75 NBR 106200
Colour	Black

Fluoro elastomer

Code	75 FKM 595
Colour	Red brown

Metal insert	Unalloyed steel DIN 1624 – EN10139
Spring	Spring steel 17223

Operating conditions

Materials combination	75 NBR 106200	75 FKM 595
T	<80 °C	<100 °C
v	to 4 m/s	to 6 m/s
p	max. 0,05 MPa/0,5 bar	max. 0.05 MPa/0.5 bar

For material definitions, it must be taken into account that it is possible that not all extreme conditions will occur simultaneously.

Fitting & installation

Shaft

Tolerance	ISO h8
Runout	IT 8
Roughness	R_z = 10 ... 16 µm

Housing bore

Tolerance	ISO H8
Roughness	R_z = 10 ... 16 µm

Careful fitting according to DIN 3760 is a prerequisite for the correct function of the seal → Technical Manual.
Further information on enquiry.

Range of dimensions for shafts-Ø D_1

Simmerring Cassette Seal type 3	25 ... 210 mm

© Freudenberg Simrit GmbH & Co. KG | Simmerrings and Rotary Seals Catalog 2007

Article list

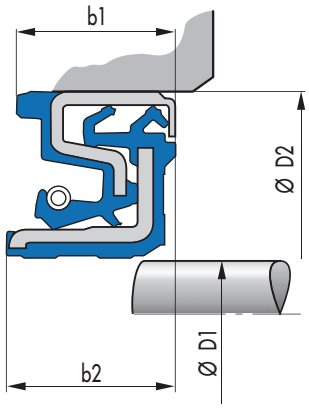

D_1	D_2	b_1	b_2	Material	Article No.	
25	52	12		75 NBR 106200	12015223	○
35	60	13	14,5	75 NBR 106200	12017029	○
35	62	13,5	14	75 FKM 585	12019335	○
35	65	14,5	17	75 NBR 106200	12019775	○
45	70	14	17	75 NBR 106200	12015392	○
45	70	14	17	75 FKM 595	12016630	○
48	75	14	17	75 NBR 106200	12015395	○
56	80	13	14,5	75 FKM 595	12016694	○
56	80	13	14,5	75 NBR 106200	12018036	○
60	84	13	14,5	75 FKM 585	12019351	○
60	84	13	14,5	75 NBR 106200	12019352	○
60	90	13,5	15	75 FKM 595	12016418	○
60	90	13,5	15	75 NBR 106200	12016423	○
65	90	13	14,5	75 NBR 106200	12019533	○
70	95	13	14,5	75 NBR 106200	12018338	○
70	95	13	14,5	75 FKM 585	12019199	○
75	100	13	14,5	75 FKM 585	12019120	○
85	110	13	14,5	75 NBR 106200	12016635	○
85	110	13	14,5	75 FKM 595	12017093	○
85	140	15	17	75 NBR 106200	12019153	○
100	129,85	12,5	14	75 NBR 106200	12020095	○
110	140	13,5	15,5	75 FKM 595	12019735	○
110	140	13,5	15,5	75 NBR 106200	12019736	○
120	150	14	15,5	75 NBR 106200	12019941	○
120	160	15	17,5	75 NBR 106200	12018572	○
121,8	150	13	12	75 NBR 106200	12020222	○
127	160	15,5	17,5	75 NBR 106200	12019068	○
130	160	14,5	16	75 NBR 106200	12016448	○
130	160	14,5	16	75 FKM 585	12019208	○
140	170	14,5	16	75 NBR 106200	12016688	○
140	170	14,5	16	75 NBR 106200	12019137	○
145	175	14,5	15,5	75 NBR 902	12019116	○
150	180	14,5	16	75 NBR 106200	12018035	○
150	180	14,5	16	75 FKM 595	12019742	○
155	190	17,5	19	75 NBR 106200	12014852	○

● Available from stock ○ On request: Tool is available, delivery at short notice

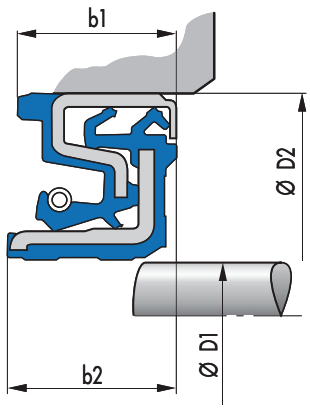

D_1	D_2	b_1	b_2	Material	Article No.	
155	195	16,5	18	75 NBR 106200	12016391	○
165	195	16,5	18	75 NBR 106200	12015149	○
165	195	16,5	18	75 FKM 595	12018543	○
170	200	15	16	75 NBR 902	12019056	○
170	200	15	16	75 FKM 595	12019084	○
178	208	16	18	75 NBR 106200	12018107	○
178	208	16	18	75 FKM 595	12019737	○
190	220	16	18	75 NBR 106200	12017120	○
190	220	16	18	75 FKM 595	12018658	○
210	240	16	18	75 NBR 106200	12019114	○
220	265	19	21	75 FKM 595	12019741	○
220	265	19	21	75 NBR 106200	12019966	○
235	270	20	22	75 NBR 106200	12019336	○

● Available from stock ○ On request: Tool is available, delivery at short notice

© Freudenberg Simrit GmbH & Co. KG | Simmerrings and Rotary Seals Catalog 2007